NOTES:

1. SUBSTRATE:
   Germanium (Ge)

2. CENTERING TOLERANCE:
   <3 ARCMIN

3. COATING (APPLY ACROSS CLEAR APERTURE)
   S1 & S2: NONE

4. FINE GRIND SURFACE

5. FOCAL LENGTH TOLERANCE: ±2%

6. ROHS COMPLIANT

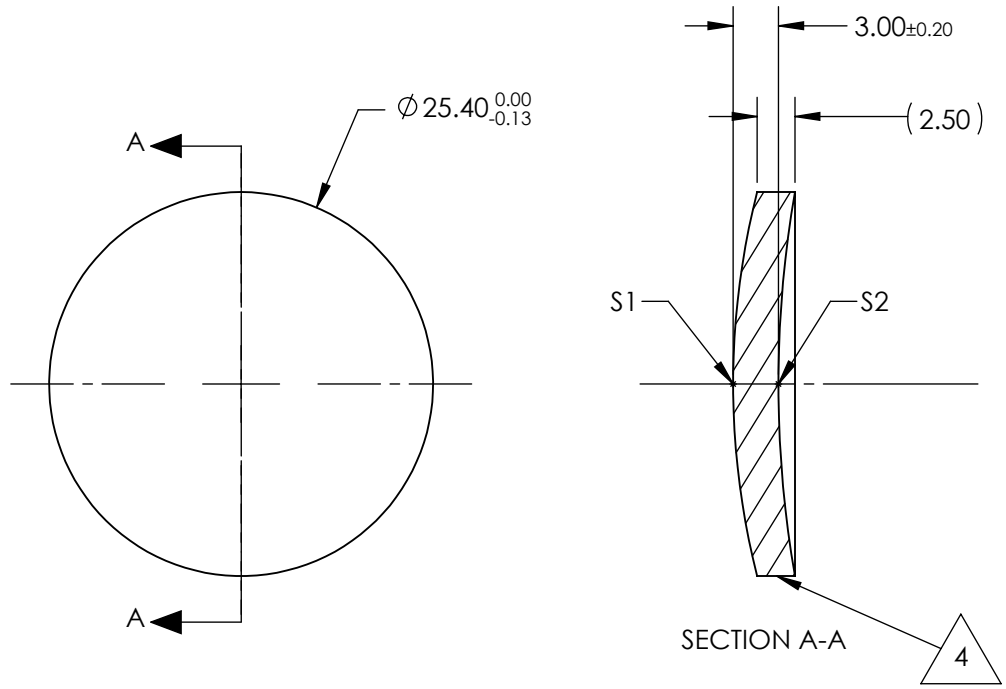

FOR INFORMATION ONLY:
DO NOT MANUFACTURE PARTS TO THIS DRAWING

	S1	S2
SHAPE	CONVEX	CONCAVE
RADIUS	51.45	74.47
IRREGULARITY AT 10.6µm	λ/20	λ/20
SURFACE QUALITY	60-40	60-40
CLEAR APERTURE	ø22.86	ø22.86
BEVEL	PROTECTED AS NEEDED	PROTECTED AS NEEDED

EFL @ 10.6µm	50
BFL @ 10.6µm	48.27

SPECIFICATIONS SUBJECT TO CHANGE WITHOUT NOTICE
DIMENSIONS ARE FOR REFERENCE ONLY

Edmund Optics®

THIRD ANGLE PROJECTION		TITLE	25.4mm Dia. x 50mm FL, Uncoated, ISP Optics Germanium (Ge) Meniscus Lens	
ALL DIMS IN	mm	DWG NO	24827	SHEET 1 OF 1