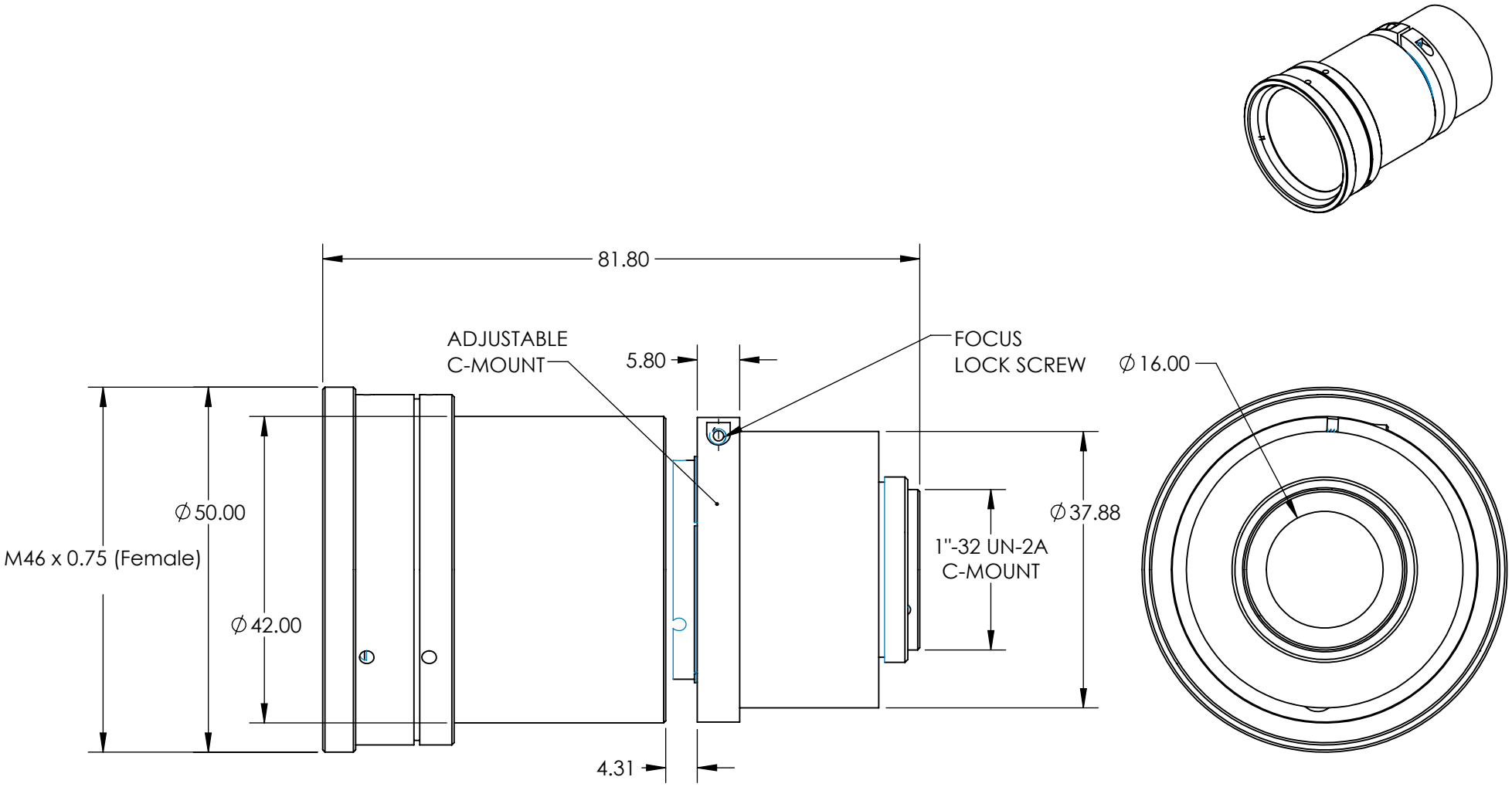

FOR INFORMATION ONLY:
DO NOT MANUFACTURE PARTS TO THIS DRAWING

SPECIFICATIONS SUBJECT TO CHANGE WITHOUT NOTICE
DIMENSIONS ARE FOR REFERENCE ONLY

Edmund Optics®

THIRD ANGLE PROJECTION		TITLE	100mm, f/8 Cr Series Fixed Focal Length Lens	
ALL DIMS IN	mm	DWG NO	15524	SHEET 4 OF 6