PART	PART #	MATERIAL
1	#54-664	SCHOTT RG850
2	#55-246	BLACK ANODIZED ALUMINUM

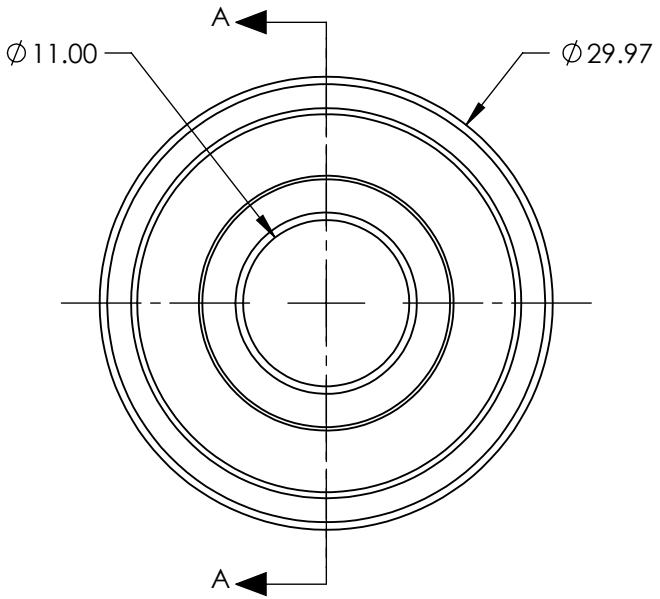

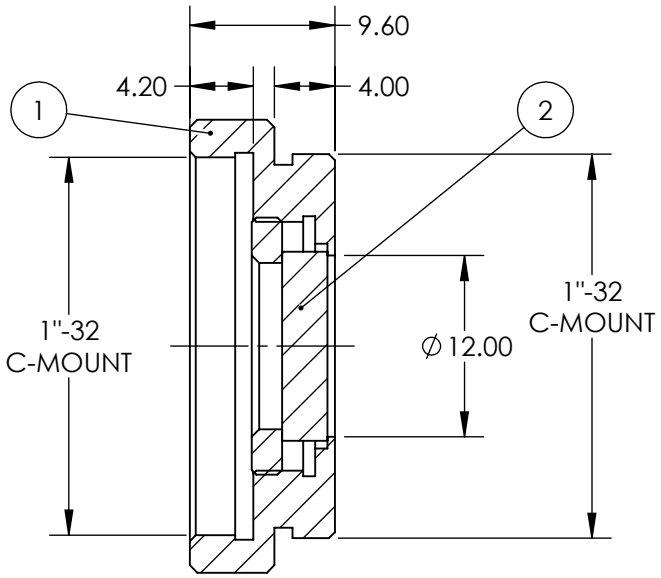

SECTION A-A

FOR INFORMATION ONLY:
DO NOT MANUFACTURE PARTS TO THIS DRAWING

SPECIFICATIONS SUBJECT TO CHANGE WITHOUT NOTICE
DIMENSIONS ARE FOR REFERENCE ONLY

SHAPE	PLANO
SPECTRAL TRANSMITTANCE (%)	97
PASSBAND LIMIT 1 (nm)	1200
CUT-OFF POSITION (nm)	850±9
STOPBAND LIMIT (nm)	700
WAVELENGTH	IR

Edmund Optics®

THIRD ANGLE PROJECTION		TITLE	12mm CA, SCHOTT RG850, C-Mount Longpass Glass Color Filter	
ALL DIMS IN	mm	DWG NO	12955	SHEET 1 OF 1