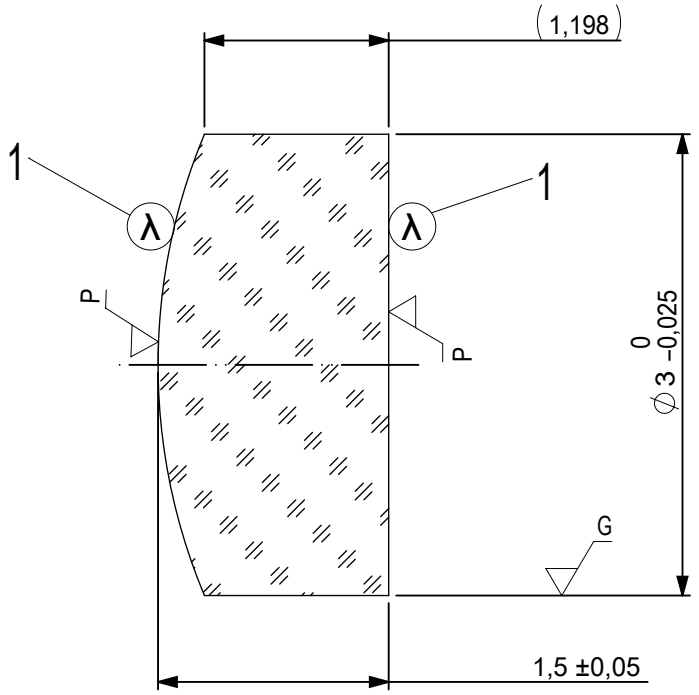

FOCAL LENGTH (EFL): 7,5 ±0,08

BACK FOCAL LENGTH (BFL): 6,51

1 AR COATING: NIR II
R(ABS) ≤ 1,5% FROM 750-800nm @ 0° AOI
R(ABS) ≤ 1,0% FROM 800-1550nm @ 0° AOI
R(AVG) ≤ 0,7% FROM 750-1550nm @ 0° AOI

LEFT SURFACE	MATERIAL	RIGHT SURFACE
R 3,88±0,004 CX	GLASS N-BK7 517/642	R ∞ PL
Øe 2,5		Øe 2,5
3/ 3 (0,5) λ=632,8 nm		3/ 3 (0,5) λ=632,8 nm
4/ -		4/ 5,8'
5/ 20 - 10 (MIL-PRF-13830B)		5/ 20 - 10 (MIL-PRF-13830B)
6/ -		6/ -

PROTECTIVE CHAMFERS AS NEEDED			FIRST ANGLE PROJECTION	Edmund Optics®
ROHS: COMPLIANT	SCALE: NONE	λ = 587,6nm		
SPECIFICATIONS SUBJECT TO CHANGE WITHOUT NOTICE. DIMENSIONS ARE FOR REFERENCE ONLY				TITLE: 3,0mm Dia, x 7,5mm FL, NIR II Coated, Plano-Convex Lens
FOR INFORMATION ONLY: DO NOT MANUFACTURE PARTS TO THIS DRAWING			ALL DIMS IN: mm	
INDICATIONS IN ACCORDANCE WITH ISO 10110				DWG NO: 67442 — SHEET SIZE: A4 — SHEET 1 OF 1