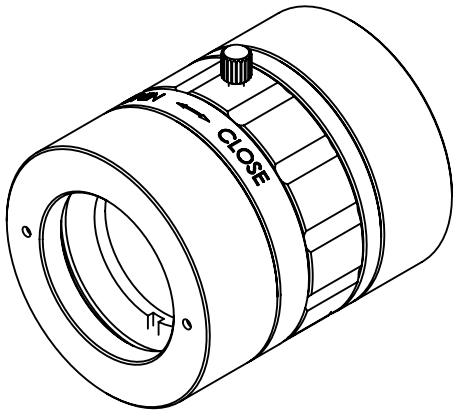

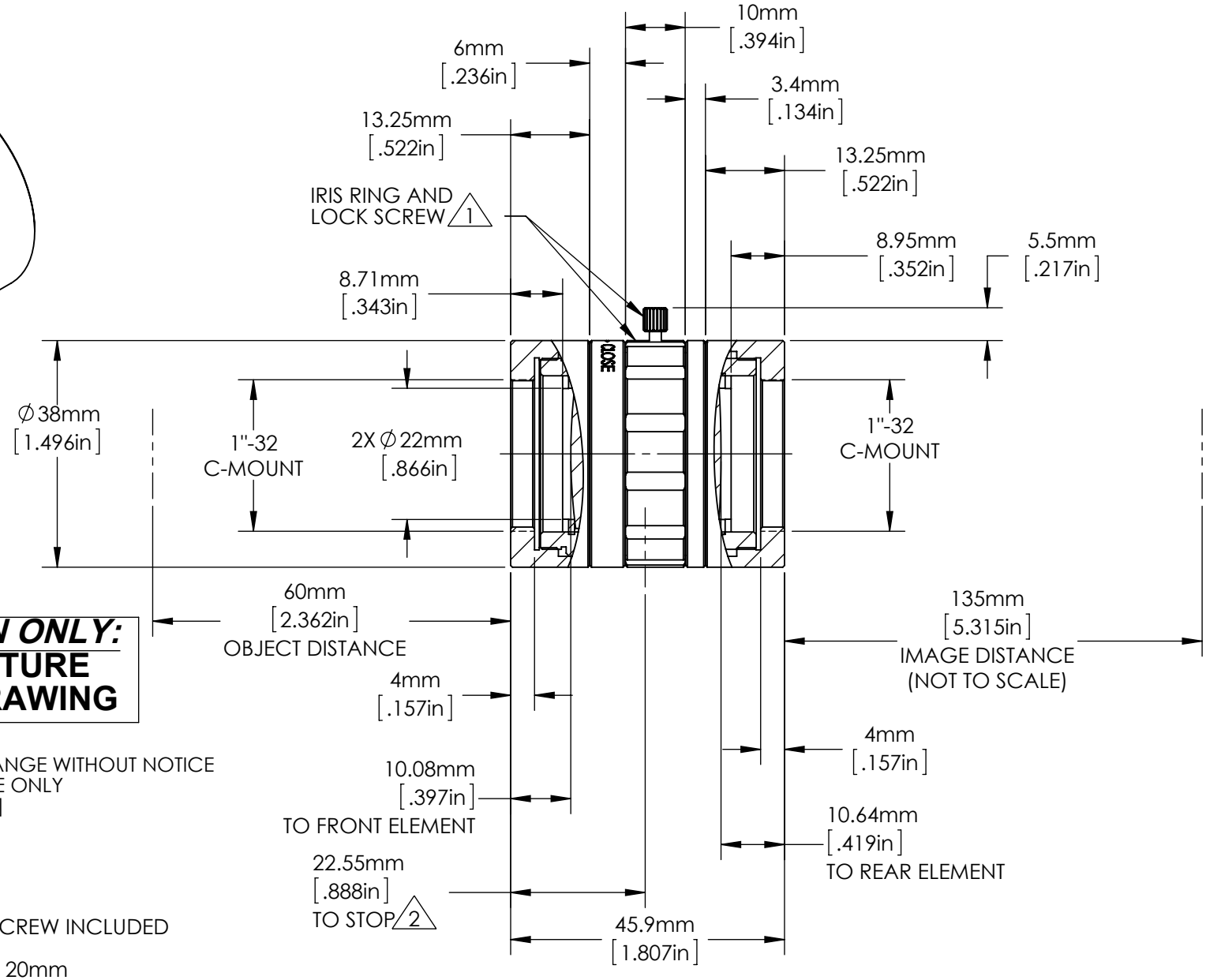

FOR INFORMATION ONLY:
DO NOT MANUFACTURE PARTS TO THIS DRAWING

SPECIFICATIONS SUBJECT TO CHANGE WITHOUT NOTICE
DIMENSIONS ARE FOR REFERENCE ONLY
DIMENSIONS ARE IN mm [INCHES]

NOTES:

1. OPTIONAL RECESSED SET SCREW INCLUDED
2. APERTURE DIAMETER: 0.8 - 20mm

MAGNIFICATION	1:2
WORKING F/#	f/7.5 - f/188
EFL ELEMENT A/ELEMENT B	75mm/150mm
COATING	VIS 0°, Ravg ≤ 0.4% @ 425 - 675nm

Edmund Optics®

TITLE	C-MOUNT ACHROMAT PAIR 1:2 WITH 75 AND 150mm FOCAL LENGTHS					
DWG NO	87191	MATERIAL	BLACK ANODIZED ALUMINUM	SHEET 1 OF 1	REV	000