NOTES:

1. SUBSTRATE:
   GRADE A FINE ANNEALED
   SCHOTT: N-SF5 673/322
2. ROHS COMPLIANT
3. CENTERING TOLERANCE (AT 587.6nm):
   BEAM DEVIATION (HALF ANGLE): <1 ARCMIN
4. COATING (APPLY ACROSS COATING APERTURE)

   S1: NONE
   S2: NONE

5. FINE GRIND SURFACE
6. POWER, IRREGULARITY, AND SURFACE QUALITY SPECIFICATIONS APPLY ACROSS CLEAR APERTURE
7. FOCAL LENGTH (EFL): 25.00mm±1%
   BACK FOCAL LENGTH (BFL): 22.47mm
8. PROTECTIVE BEVEL AS NEEDED
9. DESIGN WAVELENGTH: 587.6nm

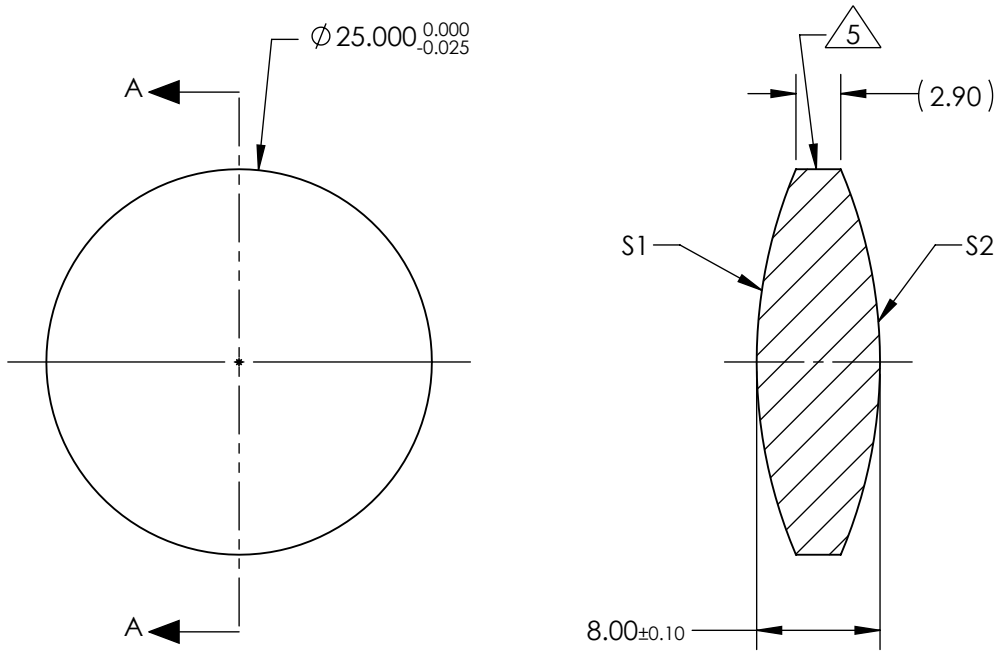

SECTION A-A

FOR INFORMATION ONLY:
DO NOT MANUFACTURE PARTS TO THIS DRAWING

	S1	S2
SHAPE	CONVEX	CONVEX
RADIUS	31.94	31.94
SURFACE QUALITY	40 - 20	40 - 20
MIN CLEAR APERTURE	∅24.00	∅24.00
MIN COATING APERTURE	N/A	N/A
POWER AT 632.8nm	3.00 RINGS	3.00 RINGS
IRREGULARITY AT 632.8nm	0.50 RINGS	0.50 RINGS

SPECIFICATIONS SUBJECT TO CHANGE WITHOUT NOTICE
DIMENSIONS ARE FOR REFERENCE ONLY

Edmund Optics®

THIRD ANGLE PROJECTION		TITLE	25mm Dia. x 25mm FL Uncoated, Double-Convex Lens
ALL DIMS IN	mm	DWG NO	32489
			SHEET 1 OF 1